Features：

- Low Power Consumption: 75uA（Typ.）
- Low output noise (47uVRMS)
- Standby Mode: 0.1uA
- Low dropout Voltage: 0.46V@500mA (Typ.)
- High Ripple Rejection: 66dB@100Hz (Typ.)
- Low Temperature Coefficient: ±100ppm/°C
- Excellent Line regulation: 0.05%/V
- Build-in chip enable and discharge circuit
- Output Voltage Range: 1.2V~4.5V (customized on command every 0.1V step)
- Highly Accurate: ±2% (±1% customized)
- Output Current Limit

Applications：

- Power source for cellular phones and various kind of PCSs
- Battery Powered equipment
- Power Management of MP3, PDA, DSC, Mouse, PS2 Games
- Reference Voltage Source
- Regulation after Switching Power

General Description：

AS2950 series is a group of positive voltage output, low power consumption, low dropout voltage regulator.

AS2950 can provide output value in the range of 1.2V~4.5V every 0.1V step. It also can be customized on command.

AS2950 includes high accuracy voltage reference, error amplifier, current limit circuit and output driver module with discharge capability.

AS2950 has excellent load and line transient response and good temperature characteristics, which can assure the stability of chip and power system. And it uses trimming technique to guarantee output voltage accuracy within±2%.

AS2950 is available in SOT-23-5, SOT89-3, SOT23-3, TO92 packages which are lead free.

AS2950 Typical Application Circuit

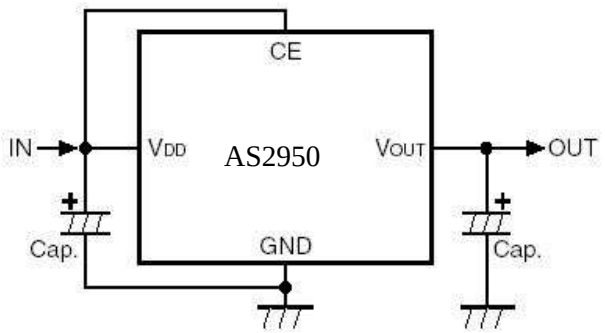

AS2950 Typical Performance Characteristics：

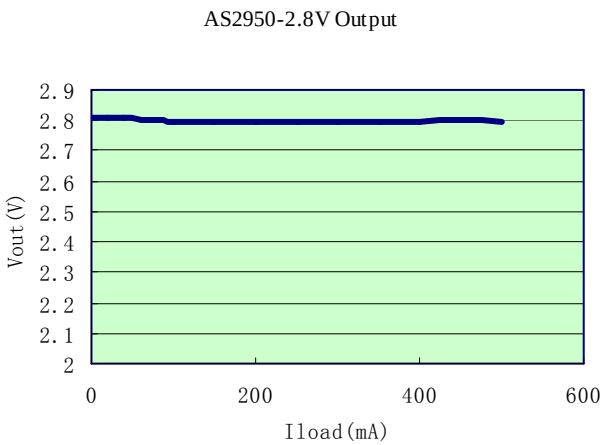

Pin Assignment:

SOT89-3-A	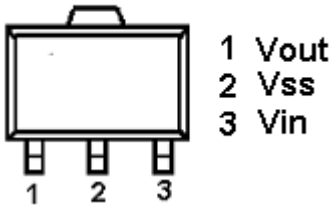	SOT89-3-B	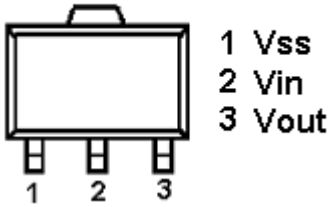
SOT23-5-A	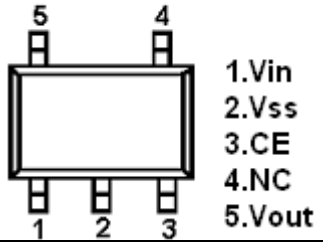	SOT23-5-B	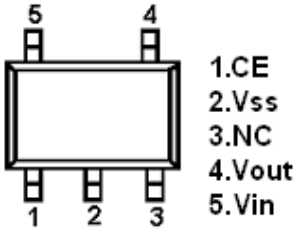
TO92	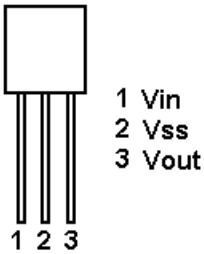	SOT23-3	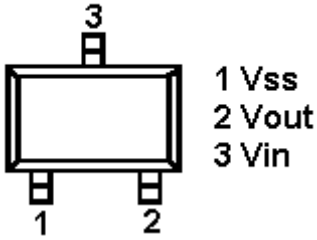

Pin Description:

	Pin Number					Symbol	Function
SOT-89-3 (A)	SOT-89-3 (B)	SOT-23-5 (A)	SOT-23-5 (B)	SOT23-3	TO-92		
1	3	5	4	2	3	Vout	Output pin
3	2	1	5	3	1	Vin	Input Pin
2	1	2	2	1	2	Vss	Ground Pin
		3	1			CE	Chip Enable Pin
		4	3			NC	No Connection

Block Diagram：

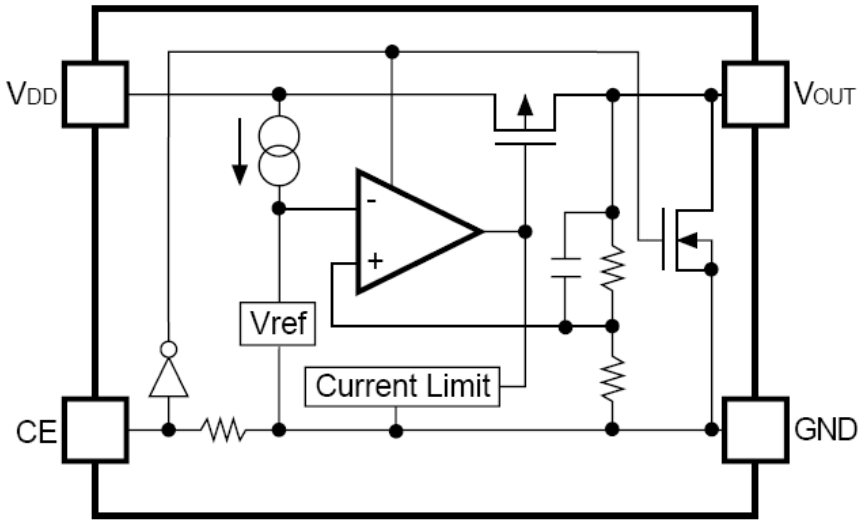

Absolute Maximum Ratings：

Max input voltage ----------10V
Junction Temperature (T_J) ----------125°C
Output Current---------- 500mA
Power Dissipation
SOT-23-5----------250mW
SOT-23-3----------200mW
SOT-89-3----------500mW
TO-92 ----------350mW
Storage Temperature (Ts) ----------45°C～150°C

Recommended Work Conditions：

Item	Min	Recommended	Max	unit
Input Voltage Range			8	V
Ambient Temperature	-40		85	°C

Electrical Characteristics：

（Test Conditions: Cin=1uF,Cout=3.4uF,TA=25°C, unless otherwise specified. ）

AS2950, for arbitrary output voltage

Symbol	Parameter	Conditions	Min	Typ	Max	Units
Vin	Input Voltage				8	V
Vout	Output Voltage	Vin=Set Vout+1V 1mA≤Iout≤30mA	Vout x0.98	Vout1	Vout X1.02	V
Iout (Max.)	Maximun Output Current	Vin-Vout=1V	500			mA

Vdrop[1]	Dropout Voltage,Vout≥2.8V	Iout=100mA		88	120	mV
		Iout=300mA		270	350	mV
		Iout=500mA		460	600	mV
$\frac{\Delta Vout}{\Delta Vin \cdot Vout}$	Line Regulation	Iout=40mA 2.8V≤Vin≤8V		0.05	0.2	%/V
$\Delta Vout / \Delta Iout$	Load Regulation	Vin=Set Vout+1V 1mA≤Iout≤500mA		20	40	mV
Iss	Supply Current	Vin=Set Vout+1V		75	90	uA
Istandby	Supply Current (Srandby)	Vin=Set Vout+1V Vce=GND		0.1	1.0	uA
$\frac{\Delta Vout}{\Delta T \cdot Vout}$	Output Voltage Temperature Coefficiency	Iout=30mA		±100		ppm/°C
PSRR	Ripple Rejection	F=100Hz, Ripple=0.5Vp-p Vin=Set Vout+1V		65		dB
Ilim	Short Current Limit	Vout=0V		200		mA
Rpd	CE Pull down Resistance		2.0	5.0	10.0	MΩ
Vceh	CE Input Voltage "H"		1.5		Vin	V
Vcel	CE Input Voltage "L"		0		0.25	V
en	Output Noise	BW=10Hz~100kHz		47		uVrms

*1. Vdrop=Vin1-(Vout2*0.98) Vout2 is the output voltage when Vin=Vout1+1.0V and Iout=300mA or Iout=500mA. Vin1 is the input voltage at which the output voltage becomes 98% of Vout1 after gradually decreasing the input voltage.*

Typical Application Circuit:

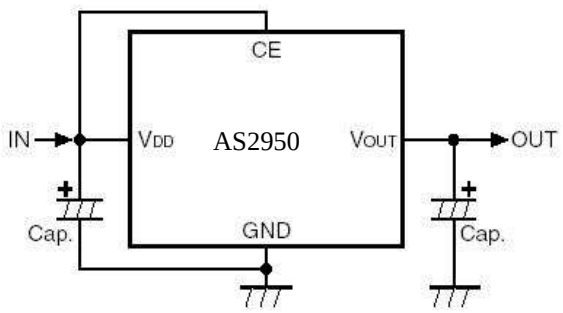

Application hints:

NOTE1: Input capacitor (Cin=1uF) is recommended in all application circuit.

NOTE2: Output capacitor (Cout=3.3uF/4.7uF) is recommended in all application to assure the stability of circuit.

Explanation:

AS2950 series is a group of positive voltage output , low noise, low power consumption, low dropout voltage regulator. AS2950 can provide output value in the range of 1.2V~4.5V every 0.1V step. It also can be customized on command.

AS2950 includes high accuracy voltage reference, error amplifier, current limit circuit and output driver module. AS2950 has excellent load and line transient response and good temperature characteristics, which can assure the stability of chip and power system. And it uses trimming technique to guarantee output voltage accuracy within±2%.

Typical Performance Characteristics:

1) Output Voltage vs. Output Current (with output short protection)

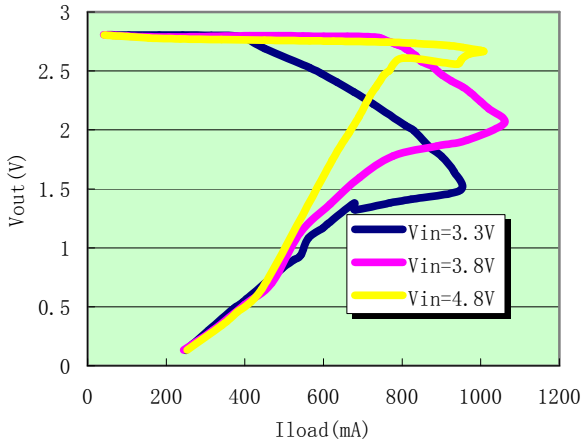

2) Output Voltage vs. Input Voltage

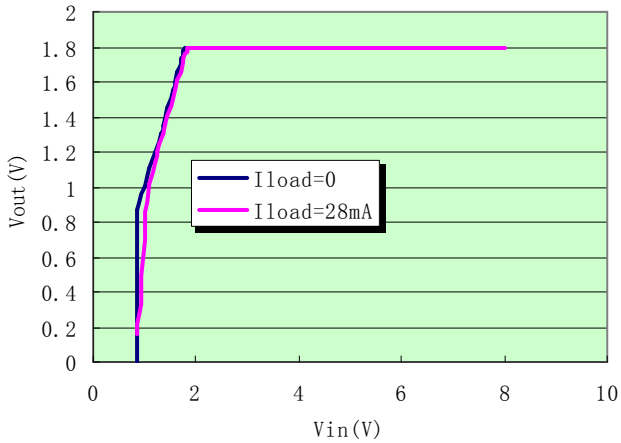

3) Dropout Voltage vs. Output Current

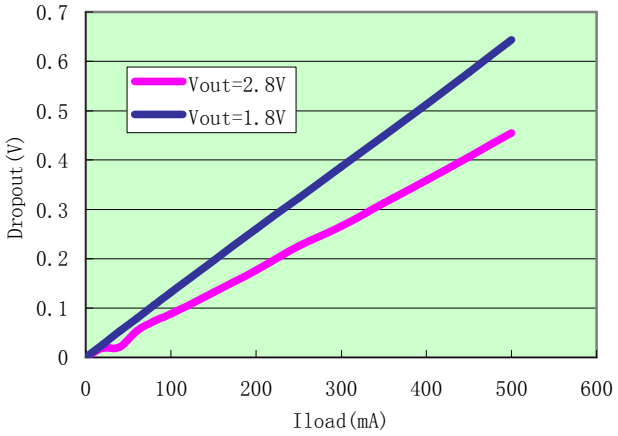

4) Ripple rejection vs. Frequency

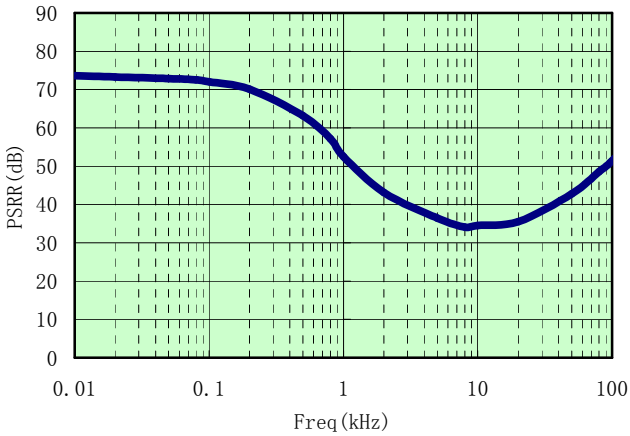

5) Line transient response

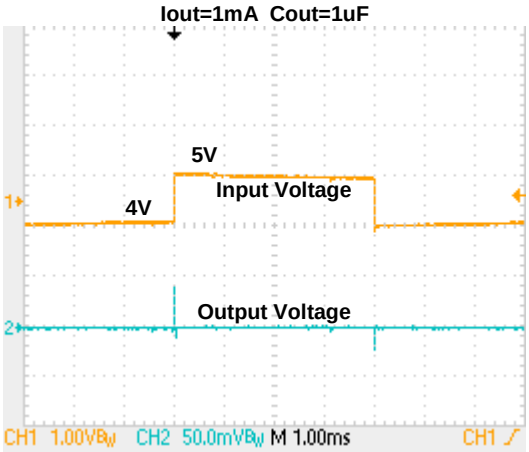

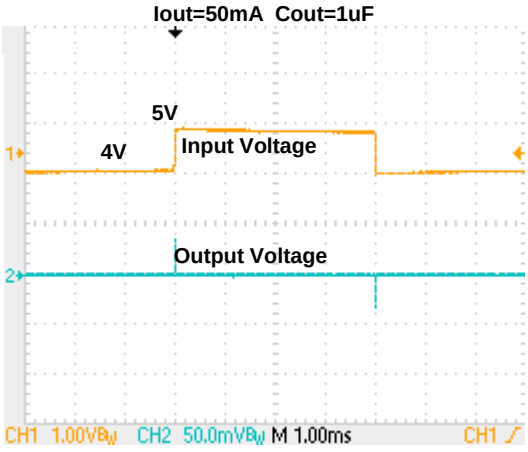

6) Load transient response

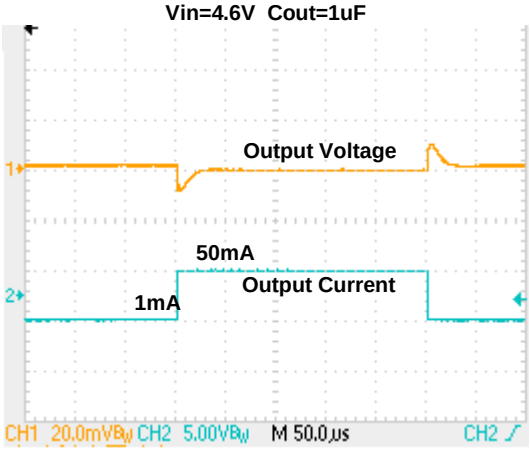

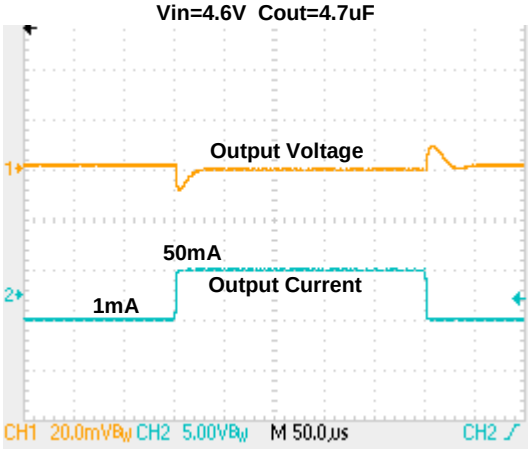

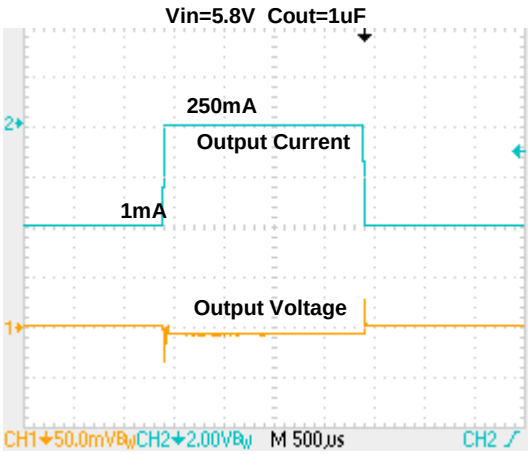

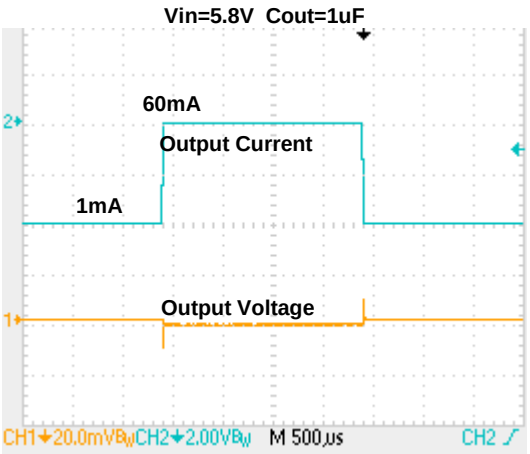

7) Startup response

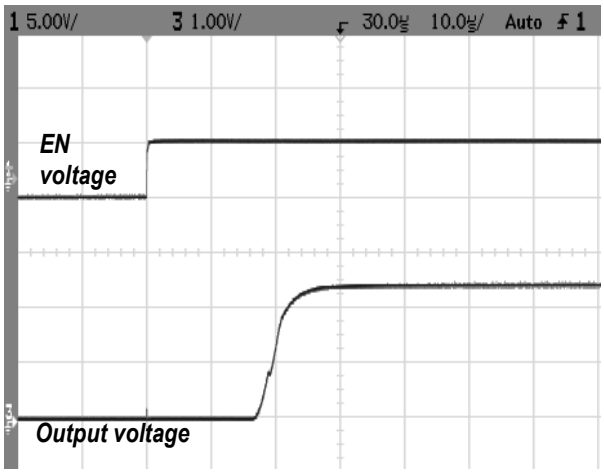

8) Shutdown response

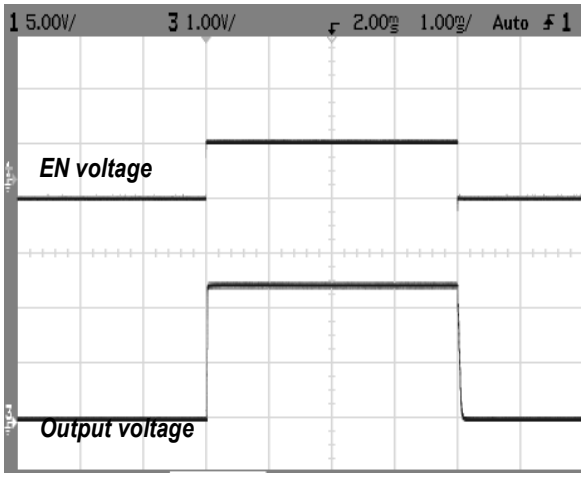

Package Information:

Package	SOT-23-5	Devices per reel	3000	Unit	mm

Package specification：

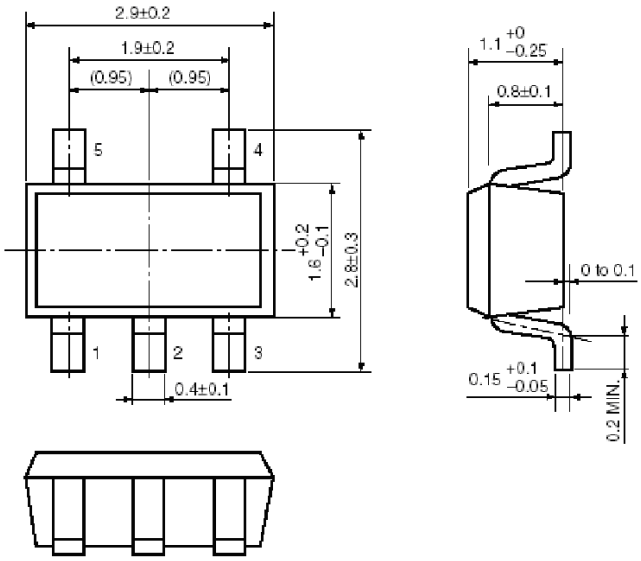

Taping specification:

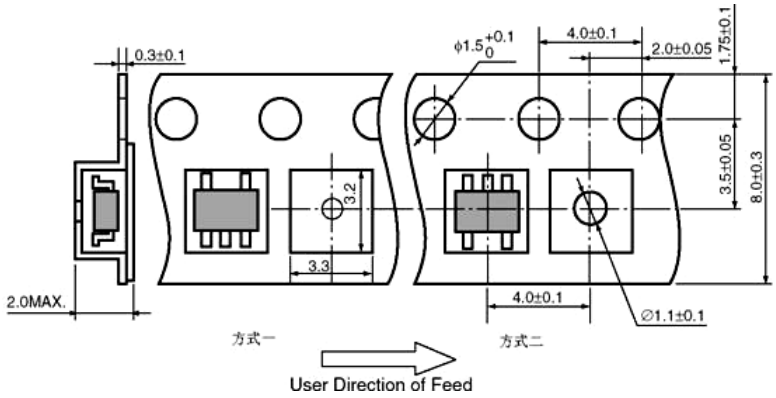

Reel specification:

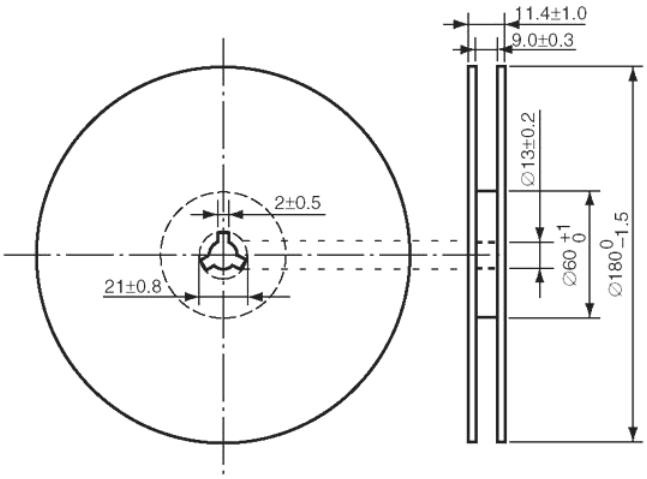

SOT-23-3

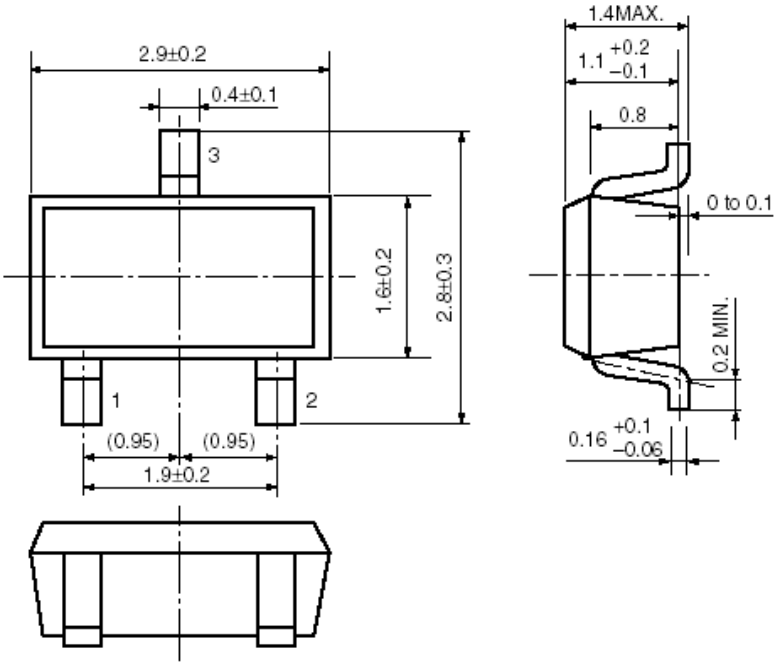

SOT-89-3

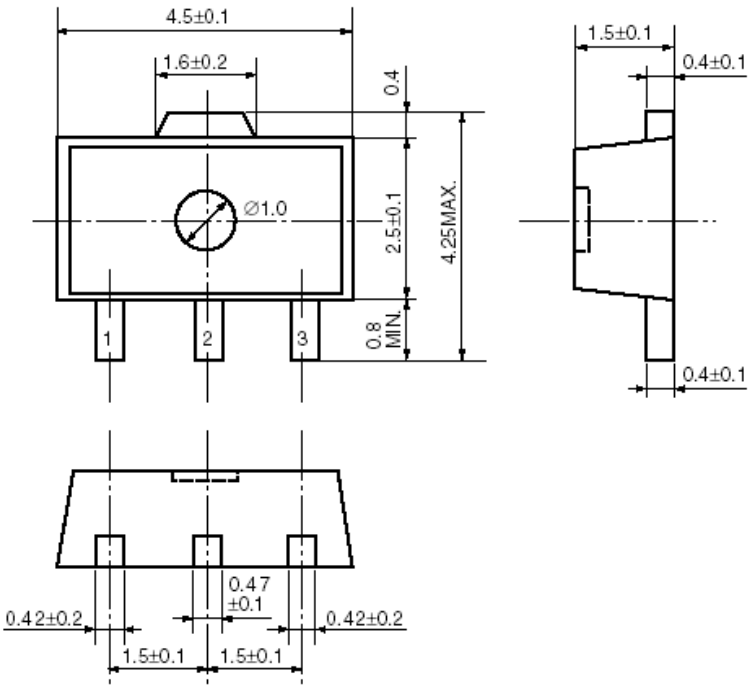

TO-92

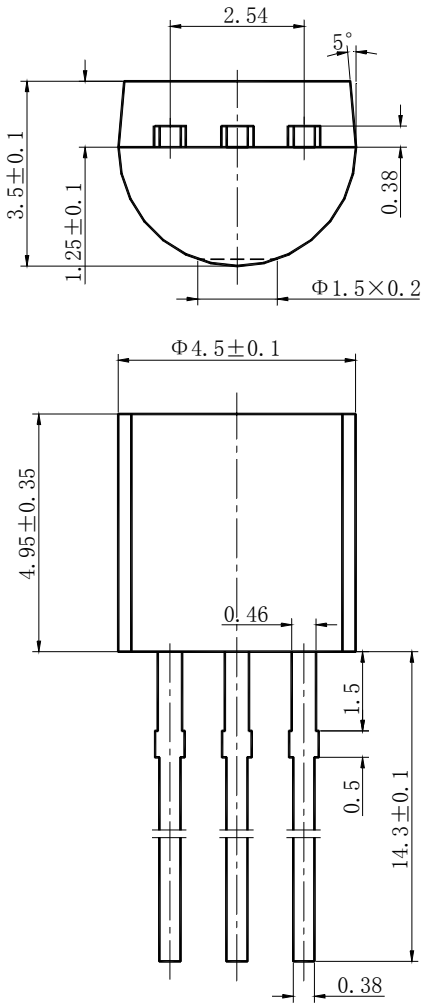

Order Information