General Description

The AS5422A is a wide input range, high-efficiency, DC- DC step-down switching regulator, capable of delivering up to 2A of output current. Current mode PWM control allows the use of small external components, such as ceramic input and output caps, as well as small inductors, while still providing low output ripples. On top of the integrated internal synchronous rectifier that eliminates external Schottky diode, AS5422A also employs a proprietary control scheme that switches the device into a power save mode during light load, thereby extending the range of high efficiency operation. Therefore, AS5422A is a much superior solution in comparison to other competitions in terms of efficiency and cost. Cycle-by-cycle current limit provides output short-circuit protection and an input OVP function guards AS5422A against possible input voltage surge. Overall, AS5422A is a highly efficient and robust solution for DC-DC step-down applications that requires wide input ranges. AS5422A is housed in a SOP8 Package.

Features

- Wide Input Operating Range from 4.5V to 18V
- High Efficiency:
  Up to 90%at Light Load
  Up to 95% at Heavy Load
- Capable of Delivering 2A
- Input OVP at 20V
- No External Schottky Diode Needed
- Current Mode control
- 0.923V Reference for Low Output voltages
- Logic Control Shutdown
- Thermal shutdown and UVLO

Applications

- LCD TVs
- Notebook computer
- Constant Current Source
- LED drivers
- FPGA power supplies

Typical Application

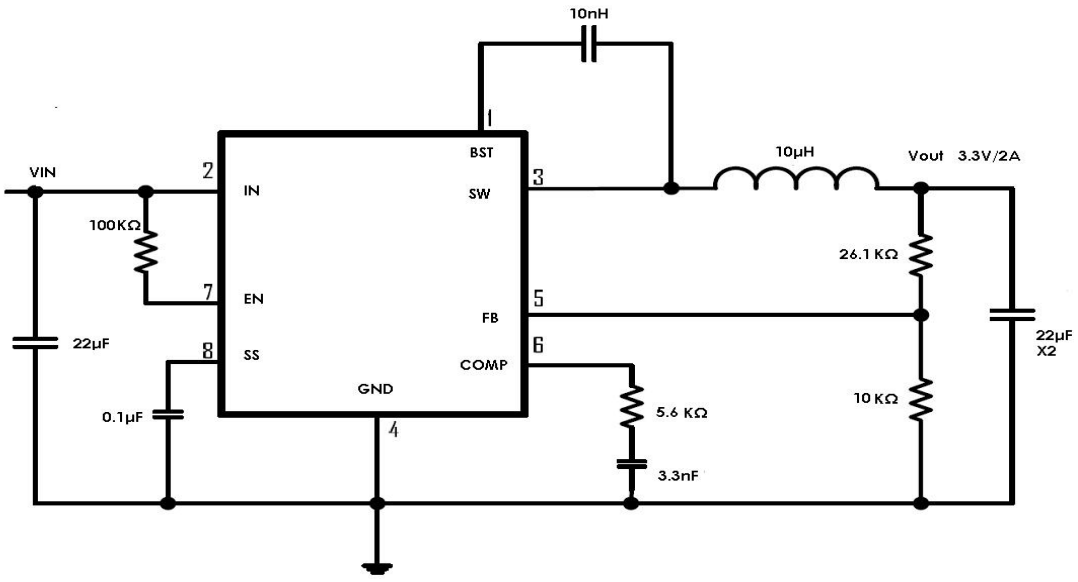

Figure1. Typical Application Circuit